SEMÁFORO TINKERCAD

Dupla: Fernando Almeida Felicioni e Diego 1°C3

Exercício 1.

Código:

```
// C++ code
//
void setup()
{
pinMode(10, OUTPUT);//Pedestre Vermelho
pinMode(9, OUTPUT);//Pedestre Verde
pinMode(5, OUTPUT);//Veiculos Verde
pinMode(4, OUTPUT);//Veiculos Amarelo
pinMode(3, OUTPUT);//Veiculos Verde
}

void loop()
{
  digitalWrite(10, HIGH);//P. Verm On
  digitalWrite(9, LOW);  //P. Verde Off
  digitalWrite(3, HIGH); //V. Verde On
  delay(5000);           //Espera 5s

  digitalWrite(3, LOW);  //V. Verde Off
  digitalWrite(4, HIGH); //V. Amarelo On
  delay(2000);           //Espera 2s

  digitalWrite(4, LOW);  //V. Amarelo Off

  digitalWrite(5, HIGH); //V. Verm On
  digitalWrite(10, LOW); //P. Verm Off
  digitalWrite(9, HIGH); //P. Verde On
  delay(4000);           //Espera 4s

  digitalWrite(9, LOW);  //P. Verde Off
  digitalWrite(10, HIGH);//P. Verm On
  delay(500);
  digitalWrite(10, LOW);//P. Verm Off
  delay(500);
  digitalWrite(10, HIGH);//P. Verm On
  delay(500);
  digitalWrite(10, LOW);//P. Verm Off
  delay(500);
}
```

Print:

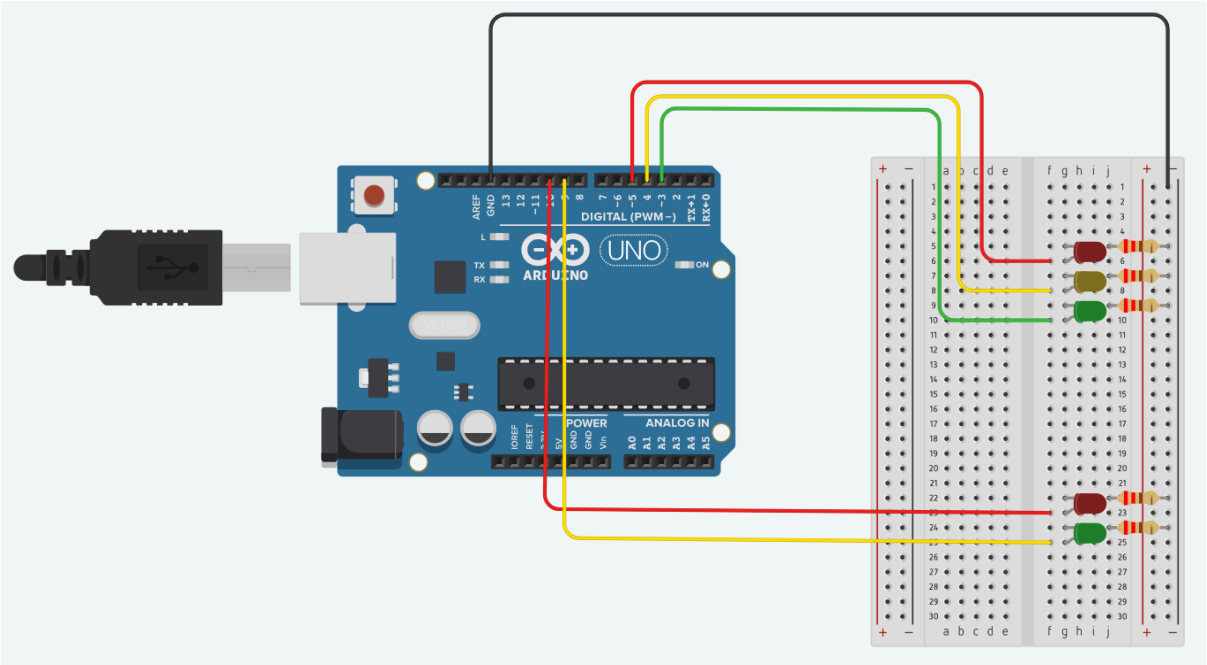

Exercício 2.
Código:

```
// C++ code
//
void setup()
{
pinMode(10, OUTPUT);//Pedestre Vermelho
pinMode(9, OUTPUT);//Pedestre Verde
pinMode(5, OUTPUT);//Veiculos Verde
pinMode(4, OUTPUT);//Veiculos Amarelo
pinMode(3, OUTPUT);//Veiculos Verde
pinMode(6, OUTPUT);
pinMode(7, OUTPUT);
pinMode(8, OUTPUT);
}

void loop()
{
  digitalWrite(5, HIGH);//P. Verm On
  digitalWrite(10, HIGH);//P. Verm On
  digitalWrite(9, LOW);  //P. Verde Off

  digitalWrite(6, HIGH); //V. Verde On
  delay(5000);           //Espera 5s

  digitalWrite(6, LOW);  //V. Verde Off
  digitalWrite(7, HIGH); //V. Amarelo On
  delay(2000);           //Espera 2s
```

```
  digitalWrite(7, LOW);  //V. Amarelo Off

  digitalWrite(8, HIGH); //V. Verm On


  //

  digitalWrite(10, HIGH);//P. Verm On
  digitalWrite(9, LOW);  //P. Verde Off
  digitalWrite(3, HIGH); //V. Verde On
  digitalWrite(5, LOW);
  delay(5000);           //Espera 5s

  digitalWrite(3, LOW);  //V. Verde Off
  digitalWrite(4, HIGH); //V. Amarelo On
  delay(2000);           //Espera 2s

  digitalWrite(4, LOW);  //V. Amarelo Off

  digitalWrite(5, HIGH); //V. Verm On
  digitalWrite(10, LOW); //P. Verm Off
  digitalWrite(9, HIGH); //P. Verde On
  delay(4000);           //Espera 4s

  digitalWrite(9, LOW);  //P. Verde Off
  digitalWrite(10, HIGH);//P. Verm On
  delay(500);
  digitalWrite(10, LOW);//P. Verm Off
  delay(500);
  digitalWrite(10, HIGH);//P. Verm On
  delay(500);
  digitalWrite(10, LOW);//P. Verm Off
  delay(500);

  digitalWrite(8, LOW); //V. Verm Off
}
```

Print:

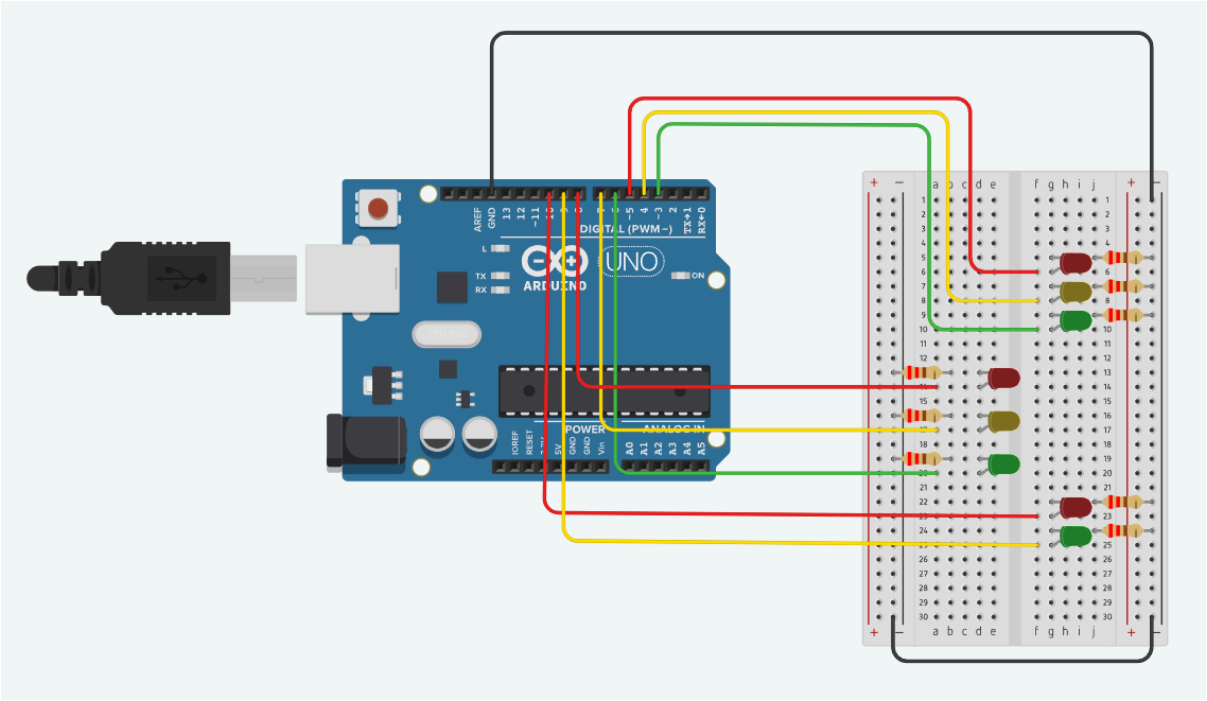
DIGITAL (PWM~)
UNO
ARDUINO
POWER
ANALOG IN